ABS

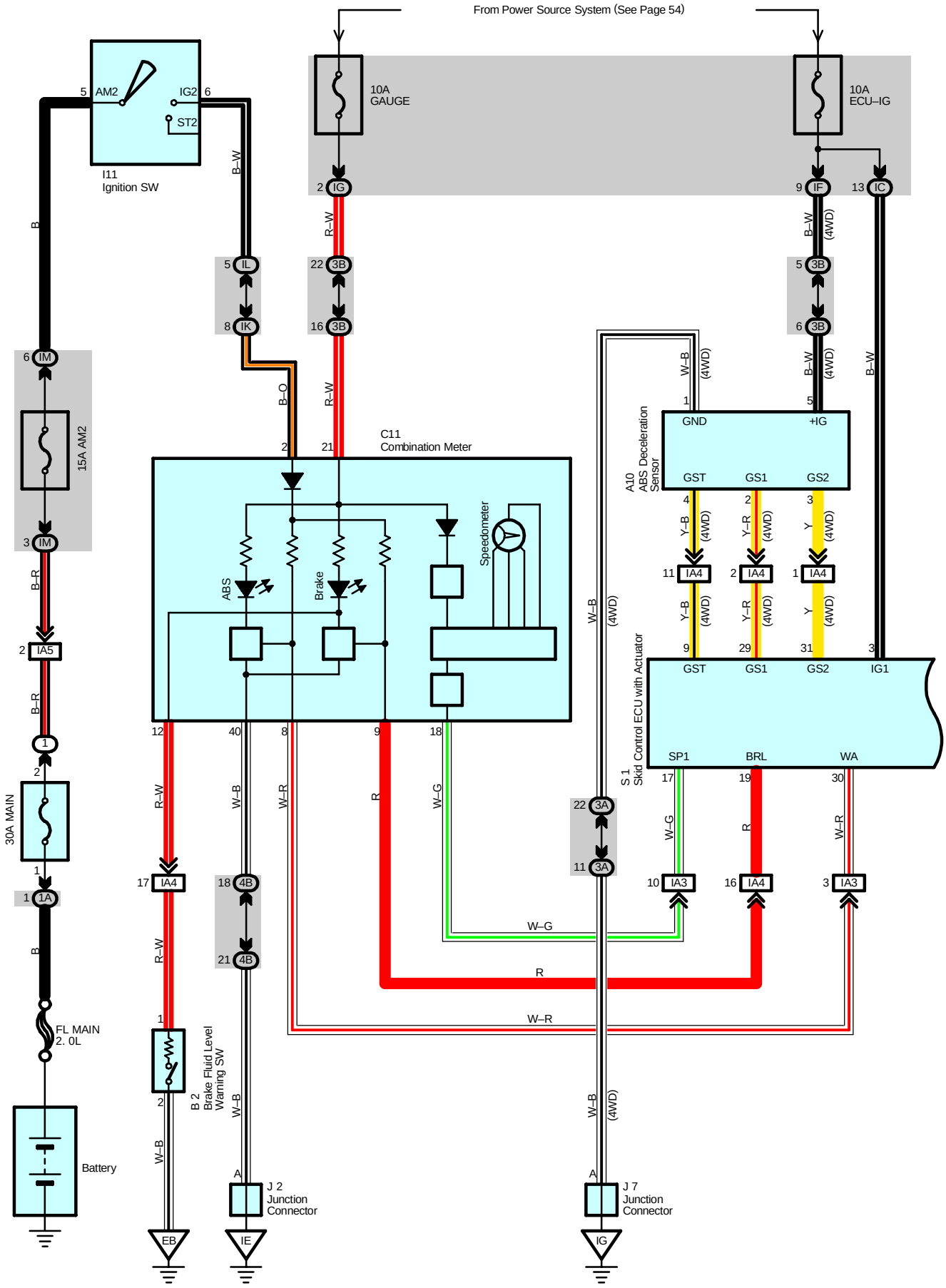

cardiagn.com

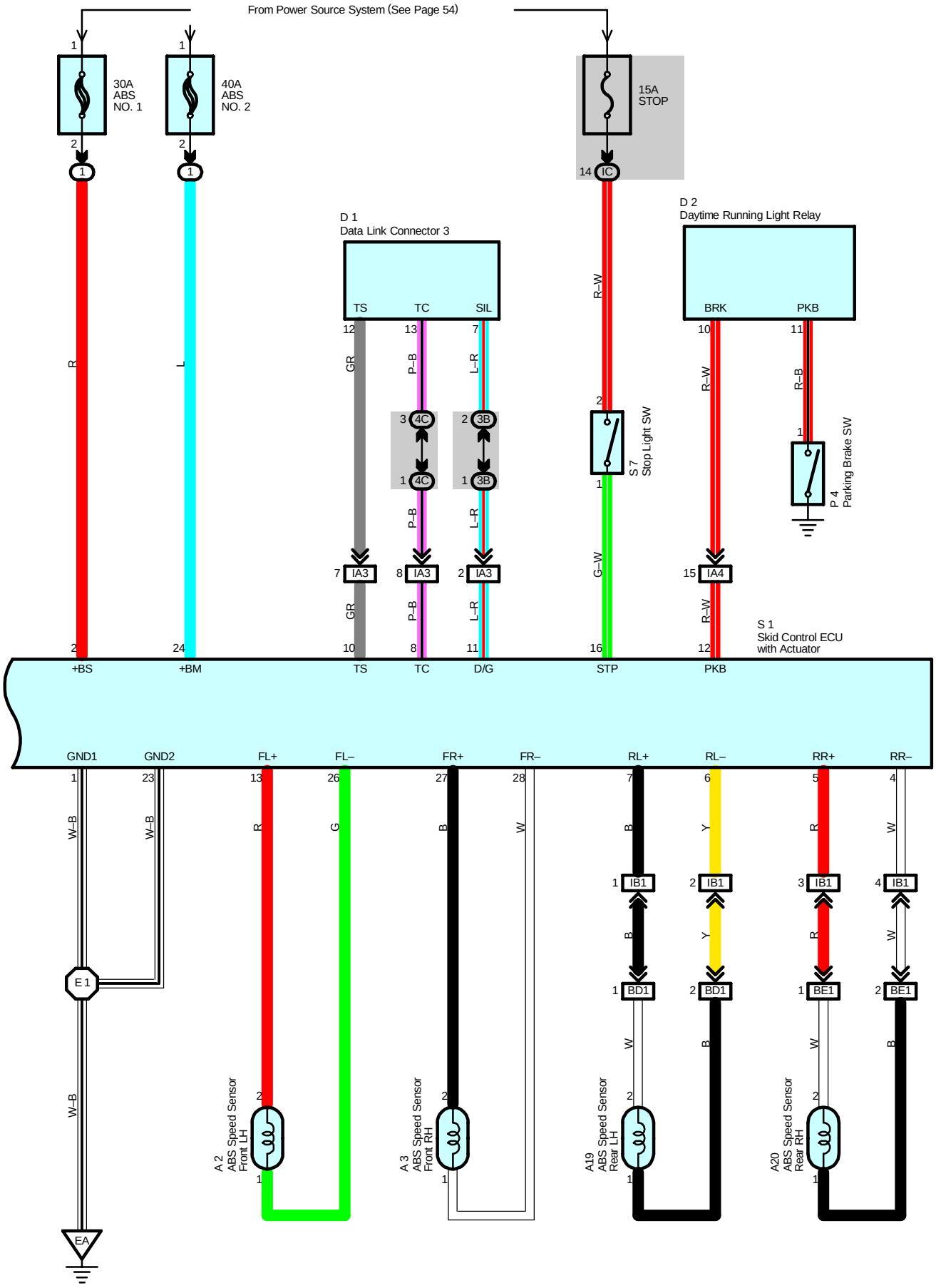

cardiagn.com

System Outline

ABS is a brake system designed to improve the operating ability and securing the stability of the vehicle by preventing the lock–up of the vehicle by controlling the wheel cylinder pressure of all the four wheels at the time of sudden braking.

1. Input Signals

(1) Speed sensor signal
The speed of the wheels is detected and input to TERMINALS FL+, FR+, RL+, and RR+ of the skid control ECU with actuator.

(2) Stop light SW signal
A signal is input to TERMINAL STP of the skid control ECU with actuator when brake pedal is depressed.

2. System Operation

When the wheels are locked–up, the solenoid inside the actuator is controlled by the signal from the skid control ECU with actuator, and the brake fluid in the wheel cylinder will flow through the reservoir and reduce the hydraulic pressure.
While the ABS is in operation, as the skid control ECU with actuator always outputs the operation signal to the pump inside the actuator, and the brake fluid stored inside the reservoir will be sucked up by the pump inside the actuator and returned to the master cylinder.
When the hydraulic pressure of the wheel cylinder is decompressed or increased until the necessary hydraulic pressure, the solenoid inside the actuator is controlled by the control signal from the skid control ECU with actuator and as a result, hydraulic pressure of the wheel cylinder will be closed at both the master cylinder and reservoir sides routes, and the hydraulic pressure of the wheel cylinder will be in the hold condition.
If increase of the hydraulic pressure volume of the wheel cylinder becomes necessary, the control signals from the skid control ECU with actuator control the solenoid inside the actuator, to resume to the normal condition. Thus the brake fluid of the master cylinder will be sent to the wheel cylinder and will increase the hydraulic pressure of the wheel cylinder. At this time, in the case that the brake fluid is left in the reservoir, it will be sucked up by the pump inside the actuator and will be sent to the wheel cylinder.

Service Hints

A2, A3 ABS Speed Sensor Front LH, RH
2–1 : Approx. 1.07 kΩ (20˚C, 68˚F)

A19, A20 ABS Speed Sensor Rear LH, RH
2–1 : Approx. 1.1 kΩ (25˚C, 77˚F)

S1 Skid Control ECU with Actuator
23, 1–Ground : Always continuity
3–Ground : Approx. 12 volts with the ignition SW at ON position
16–Ground : Approx. 12 volts with the brake pedal depressed
2, 24–Ground : Always approx. 12 volts

: Parts Location

Code	See Page	Code	See Page	Code	See Page
A2	34 (2ZZ–GE)	B2	34 (2ZZ–GE)	J7	39
	36 (1ZZ–FE)		36 (1ZZ–FE)	P4	39
A3	34 (2ZZ–GE)	C11	38	S1	35 (2ZZ–GE)
	36 (1ZZ–FE)	D1	38		37 (1ZZ–FE)
A10	38	D2	38	S7	39
A19	40	I11	39		
A20	40	J2	39		

: Relay Blocks

Code	See Page	Relay Blocks (Relay Block Location)
1	23	Engine Room R/B (Engine Compartment Left)

cardiagn.com

: Junction Block and Wire Harness Connector

Code	See Page	Junction Block and Wire Harness (Connector Location)
IC	25	Engine Room Main Wire and Instrument Panel J/B (Lower Finish Panel)
IF	25	Instrument Panel Wire and Instrument Panel J/B (Lower Finish Panel)
IG		
IK	24	
IL		
IM		
1A	23	Engine Wire and Engine Room J/B (Engine Compartment Left)
3A	29	Instrument Panel Wire and RH J/B (Right Side of the Instrument Panel Reinforcement)
3B		
4B	32	Instrument Panel Wire and Center J/B (Behind the Combination Meter)
4C		

: Connector Joining Wire Harness and Wire Harness

Code	See Page	Joining Wire Harness and Wire Harness (Connector Location)
IA3	46	Engine Room Main Wire and Instrument Panel Wire (Instrument Panel Reinforcement LH)
IA4		
IA5		
IB1	46	Engine Room Main Wire and Floor Wire (Cowl Side Panel LH)
BD1	50	Skid Control Sensor Wire LH and Floor Wire (Quarter Wheel House LH)
BE1	50	Skid Control Sensor Wire RH and Floor Wire (Quarter Wheel House RH)

: Ground Points

Code	See Page	Ground Points Location
EA	42 (2ZZ–GE)	Front Right Fender
	44 (1ZZ–FE)	
EB	42 (2ZZ–GE)	Front Left Suspension Tower
	44 (1ZZ–FE)	
IE	46	Behind Combination Meter
IG	46	Right Kick Panel

: Splice Points

Code	See Page	Wire Harness with Splice Points	Code	See Page	Wire Harness with Splice Points
E1	42 (2ZZ–GE)	Engine Room Main Wire	E1	44 (1ZZ–FE)	Engine Room Main Wire

cardiagn.com